MOTIVECTION
Journal of Mechanical Electrical and Industrial Engineering

Volume: 8, Number: 3, 2026
ISSN: 2655 – 7215 [printed] ; 2685-2098 [online]
DOI: https://doi.org/10.46574/motivection.v8i3.642

Bluetooth-Based Ignition, Starter, and Horn Control for a Conventional Motorcycle Using Arduino Uno: Functional Verification and Range Limits with and without an Obstacle

Ilham Yuliady[1*], Zulfadli[1], Yogi Dian Alfana[2], Septiana Vratiwi[3]

ABSTRACT

Low-cost controllers that let an Android smartphone switch a motorcycle's ignition and starter over Bluetooth are built frequently, yet their communication range is usually reported as a single value without the propagation condition or the distance step that bounds it. This study designed and tested an Arduino Uno control unit that operates the ignition (contact) circuit, a brake-switch signal, the starter relay, and the horn of a conventional motorcycle through an HC-06 Bluetooth module and a four-channel relay module. A functional test checked whether the OFF, ON, START, and HORN/ALARM commands produced their designed relay responses, and a range test recorded whether commands were still executed at 15 distances from 1 to 32 m, with and without an obstacle between the smartphone and the motorcycle. All four commands produced the designed responses. With the obstacle, commands were executed up to 17 m and failed from 19 m onward; without it, they were executed up to 29 m and failed from 30 m onward. The range limits therefore lie between 17 and 19 m and between 29 and 30 m, so the tested obstacle shortened the usable range by about 34–43%. Because each distance has a single recorded status per condition and only one obstacle configuration was tested, these limits describe the tested setup rather than a general reliability figure. The prototype is suitable as a short-range convenience control and a teaching object, but it provides no command authentication and should not be presented as an anti-theft system.

Keywords
HC-06 Bluetooth module; Relay-based ignition control; Motorcycle starter; Smartphone control; Bluetooth range

[1] Department of Automotive Engineering, Faculty of Engineering, Universitas Negeri Padang
Jl. Prof. Dr. Hamka, Air Tawar, Padang 25131, Indonesia
[2] Department of Mechanical Engineering, Faculty of Engineering, Universitas Negeri Padang
Jl. Prof. Dr. Hamka, Air Tawar, Padang 25131, Indonesia
[3] Department of Electrical Engineering, Faculty of Engineering, Universitas Negeri Padang
Jl. Prof. Dr. Hamka, Air Tawar, Padang 25131, Indonesia
* Corresponding Author: ilhamyuliady@ft.unp.ac.id

Submitted : September 18,2026. Accepted : November 20, 2026. Published : November 24, 2026

INTRODUCTION

Most conventional motorcycles still rely on a mechanical key that closes the ignition circuit and enables the electric starter. The arrangement is robust and easy to service, but every control function depends on one physical part, and adding functions such as remote starting or an audible locator requires additional switching hardware. Microcontroller retrofits provide this hardware by placing relays between a low-current controller and the existing vehicle circuits, so that an RFID card, a fingerprint sensor, or a smartphone can open or close those circuits [1]–[3]. The same principle has been applied to other motorcycle electrical functions, for example the automatic control of turn-signal and brake lamps with an Arduino [4].

This is an open access article distributed under the Creative Commons 4.0 Attribution License

Two development directions are visible in this work. The first uses the smartphone as a local remote control. Android applications have been used to start a motorcycle through an Arduino Uno [5], to issue starter commands by voice through an HC-06 module [6], to combine engine starting with an alarm [7], and to operate the key, starter, horn, and alarm functions from one Bluetooth module whose electrical power demand was also measured [8]. The second direction adds identity verification or wide-area connectivity. Fingerprint sensors restrict starting to registered users [2], [9], fingerprint access has been combined with GPRS messaging [10] and with remote control through a Telegram bot [11], RFID tags serve as access credentials [1], [12], and GPS, GSM, or Wi-Fi links allow engine cut-off and vehicle tracking beyond Bluetooth range [3], [12]–[14]. These systems offer stronger protection at the cost of additional sensors, network services, and power demand, which is why simple Bluetooth control remains attractive when only local switching is needed.

What these reports do not yet provide is a comparable account of how far such a link can be relied upon. Range is either omitted or given as one number. A starter controller using an HC-06 module worked up to 10 m and failed at 12 m, without the line-of-sight condition being stated [6], whereas an HC-05-based module worked up to 13 m in an open area but only up to 6 m in an enclosed space [8]. These figures differ by more than a factor of two, and the reason cannot be identified because the obstruction, the device placement, and the distance step that bounds each limit are rarely reported together. The omission matters because received Bluetooth signal strength varies strongly with the handset model, its orientation, absorption by the human body, and reflections from nearby surfaces [15], and because tissue-like media attenuate 2.4 GHz Bluetooth signals heavily [16]. A second gap concerns the language of security. Several of these prototypes are presented as security systems, yet Bluetooth pairing and session establishment are themselves open to impersonation and key-negotiation downgrade attacks [17], [18], and passive keyless entry and start systems, a design also fitted to some motorcycles, have been shown to be vulnerable to relay attacks [19] and to rely on weak proprietary authentication [20]. A smartphone link that sends unauthenticated commands to the ignition and starter cannot therefore be equated with a security function without an explicit threat analysis.

This study addresses the first gap directly and the second by bounding its claims. It reports an Arduino Uno control unit that switches the ignition (contact) circuit, a brake-switch signal, the starter relay, and the horn of a conventional motorcycle through four relays; it verifies each command functionally; and it records the command range with and without an obstacle on the same distance grid, reporting each limit as the interval between the last successful and the first failed distance. The objectives were (i) to implement relay-based Bluetooth control of the four functions, (ii) to verify that each command produces its designed relay response, and (iii) to determine the range limits under obstructed and unobstructed conditions. The question is relevant beyond this prototype. Controllers of this kind have been built repeatedly in prototype studies [5]–[8], and practical trainers have been developed to teach automotive electrical and electronic systems [21], [22]; a range figure that does not state its propagation condition and resolution can mislead both users who depend on the link and instructors who use it as a teaching object. No anti-theft performance is claimed, because authentication and resistance to unauthorized access were not tested.

METHOD

Research Design

The study followed an engineering design-and-test approach, in which a prototype is built to a specified function and then evaluated against predefined criteria. The object was the starter control system of a conventional motorcycle equipped with an electric starter, with an Arduino Uno as the control center. The work proceeded from literature review and conceptual design

to the preparation of tools and materials, device design, fabrication, testing, troubleshooting when a function did not behave as expected, data recording, and reporting, as summarized in Figure 1.

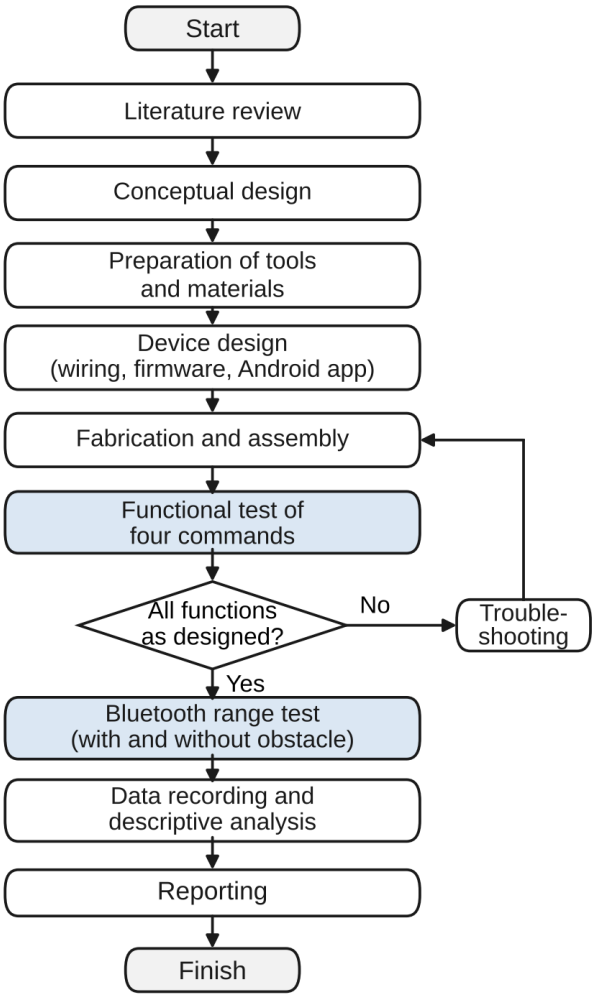

Figure 1. Research workflow. The functional test precedes the range test; a command that fails the functional test returns the prototype to troubleshooting and fabrication.

The sequence in Figure 1 also determines how the range data can be read. The range test began only after every command had passed the functional test, so a missing response during the range test reflects loss of the communication link rather than a fault in the control logic.

Equipment and System Architecture

The control unit comprised an Arduino Uno R3, an HC-06 Bluetooth module, a four-channel relay module, a DC–DC step-down module, and jumper wires. The vehicle side comprised the 12 V battery, the ignition (contact) circuit, the brake-switch signal line, the starter relay (solenoid), the starter motor, and the horn. An Android smartphone served as the user interface, and a laptop running the Arduino IDE and App Inventor was used for programming. Table 1 lists the main components and their roles.

Table 1. Main components of the control system and their roles

Component	Role in the system
Arduino Uno R3	Reads command characters and drives digital outputs D2–D5
HC-06 Bluetooth module	Receives commands from the smartphone and passes them to the Arduino through a serial link
Four-channel relay module	Opens or closes the ignition, brake-switch signal, starter-relay, and horn circuits
DC–DC step-down module	Supplies the control circuit from the vehicle's 12 V system
Android smartphone	Hosts the control application and transmits commands
12 V battery, starter relay, starter motor	Power source and actuators of the vehicle's starting system

Figure 2 shows how these components are connected. The smartphone sends command characters over Bluetooth to the HC-06 module, which passes them to the Arduino through a 9600 bps serial link. The Arduino then sets its digital outputs D2–D5, each of which drives one relay. Because the relay contacts, not the microcontroller, carry the vehicle-side current, the Arduino outputs never supply the starter or horn load directly; this separation is essential because the digital pins of a microcontroller are not designed for the operating current of a starter circuit. The step-down module supplies the control unit from the same 12 V battery that feeds the vehicle circuits.

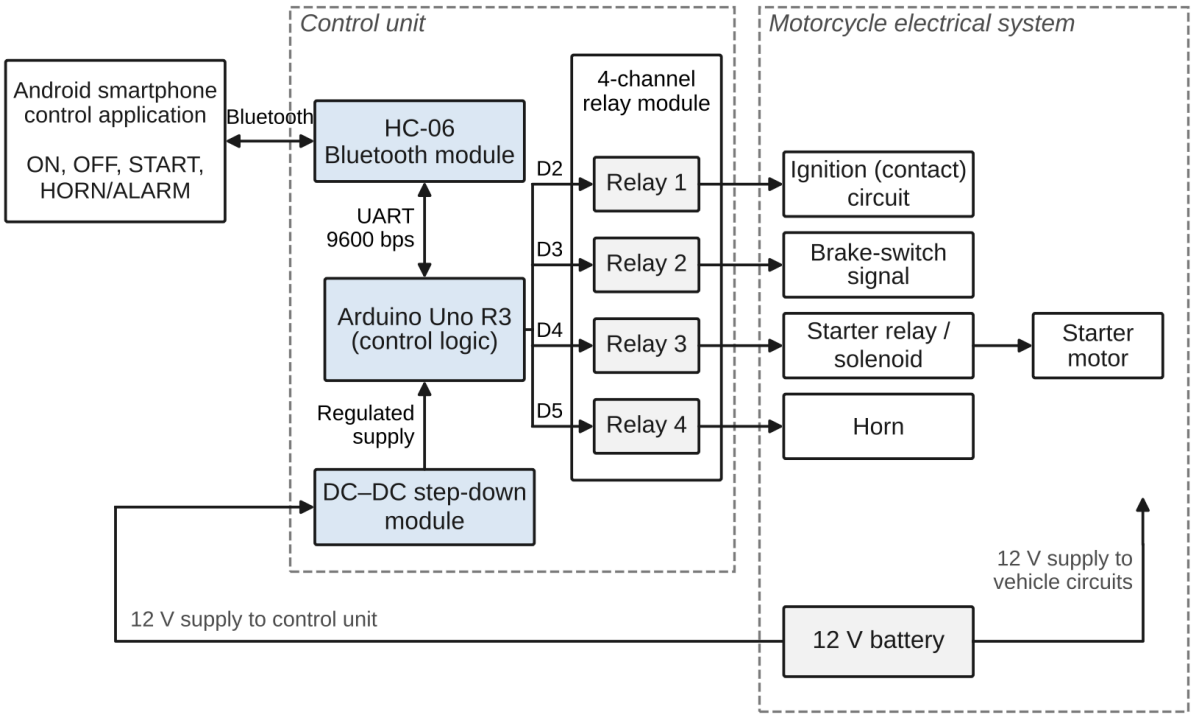

Figure 2. Architecture of the Bluetooth control system. Digital outputs D2–D5 drive one relay each, and each relay switches one vehicle circuit; arrows indicate the direction of signal or power flow.

Software and Control Logic

The Android application was developed in App Inventor and provides four buttons: ON and OFF for the ignition circuit, START for the starting sequence, and HORN/ALARM for the audible alert (Figure 3). Each button transmits a predefined command character to the HC-06 module.

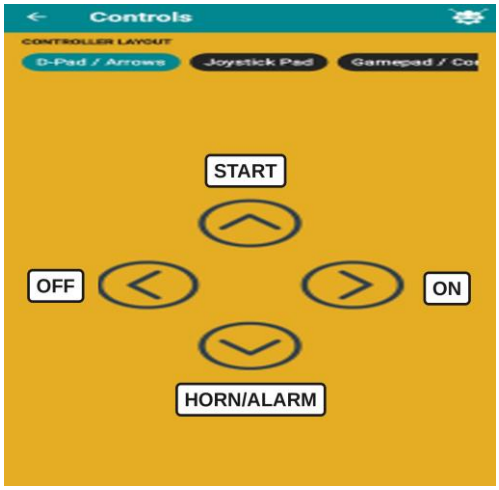

Figure 3. Control screen of the Android application used in testing. The text labels were added to indicate the command assigned to each button.

The firmware was written in the Arduino IDE. Relays 1 to 4 are connected to pins D2 to D5, and Table 2 summarizes the resulting output mapping together with the response designed for each command. START is the only command that acts on two relays: because the brake-switch input forms part of the starting sequence of the test motorcycle, relay 2 reproduces that input electrically while relay 3 energizes the starter relay.

Table 2. Output mapping and designed response of each command

Command	Relay (Arduino pin)	Designed response
ON	Relay 1 (D2)	Closes the ignition (contact) circuit
OFF	Relays 1–4 (D2–D5)	Releases all relays
START	Relay 2 (D3), Relay 3 (D4)	Triggers the brake-switch signal and the starter relay in a programmed sequence
HORN/ALARM	Relay 4 (D5)	Activates the horn

Assembly

The Arduino, step-down module, HC-06 module, and relay module were assembled according to the wiring in Figure 4. The HC-06 module is connected to the hardware serial pins of the Arduino, and the relay inputs are connected to D2–D5. On the vehicle side, the relay contacts were connected to the ignition circuit, the brake-switch signal line, the starter relay, and the horn, while the 12 V battery remained the supply for all vehicle loads.

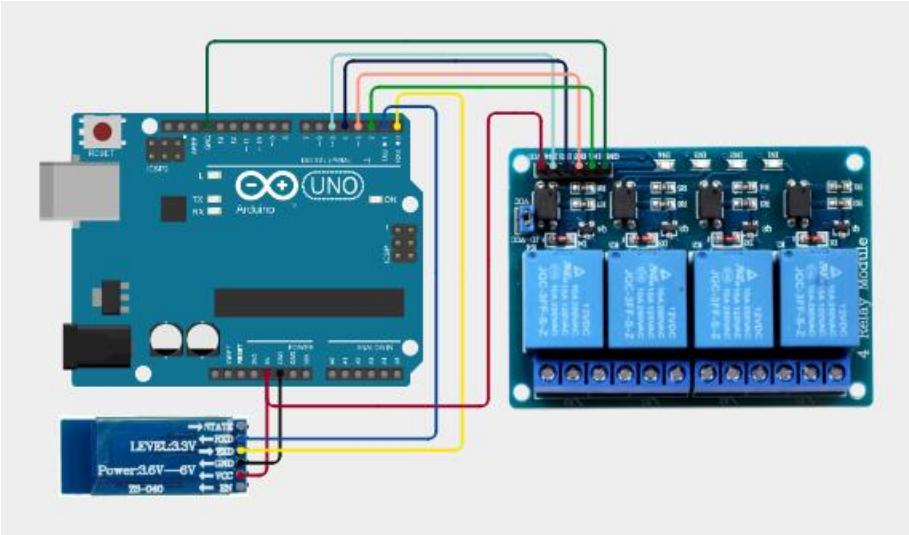

Figure 4. Wiring of the HC-06 Bluetooth module and the four-channel relay module to the Arduino Uno R3. The HC-06 TXD and RXD lines are connected to the Arduino RX (D0) and TX (D1) pins, and the relay inputs to D2–D5.

Test Procedure and Data Analysis

Testing was conducted in two stages. In the functional test, each command was sent from the application, and the serial characters received by the Arduino, the resulting relay states, and the vehicle response were observed and compared with the designed responses in Table 2. A command was judged successful when the observed response matched the designed response.

In the range test, the distance between the smartphone and the motorcycle was increased stepwise through 1, 3, 5, 8, 10, 13, 15, 17, 19, 23, 26, 29, 30, 31, and 32 m under two conditions: with an obstacle between the smartphone and the motorcycle and without an obstacle. At each distance, the status was recorded as active if the control unit still received and executed commands and as inactive if a command no longer produced a response. Distance-stepped checks of command execution of this kind have been used to report the range of earlier Bluetooth starter controllers [6], [8].

The analysis was descriptive. For each condition, the last distance with an active status and the first distance with an inactive status were identified. Because no distances between these two points were tested, the true range limit lies within this interval, and it is therefore reported as an interval rather than a single value. The width of the interval is set by the distance step, which was 2 m around the obstructed limit and 1 m around the unobstructed limit. The cryptographic strength of the Bluetooth link, the command latency, the power consumption, and long-term durability were not tested and lie outside the scope of this study.

RESULTS AND DISCUSSION

Functional Test

Table 3 compares the observed response of each command with its designed response. All four commands produced the designed relay responses.

Table 3. Functional test results for the four commands

Command	Observed Arduino and relay response	Result
OFF	All relays inactive	As designed
ON	Ignition-circuit relay (Relay 1) active	As designed
START	Brake-switch relay (Relay 2) and starter relay (Relay 3) operated in the programmed sequence	As designed
HORN/ALARM	Relay 4 active	As designed

The result confirms that the command path from the application through the HC-06 module and the Arduino to each relay was mapped correctly, including the two-relay START sequence, the only command whose outcome depends on the order of relay actions. It does not yet show how reliably the commands execute, because the number of repetitions per command, the delay between command and actuation, and the supply voltage during cranking were not recorded. This last quantity deserves attention in future tests: the starter motor and the step-down module draw from the same battery, so a voltage dip during cranking could reset the controller. The successful START response shows that the controller completed the starting sequence in the functional test, but without voltage measurements it cannot be concluded that the controller is immune to such dips.

Bluetooth Range Test

Figure 5 shows the status recorded at each tested distance. Without the obstacle, commands were executed up to 29 m and failed from 30 m onward; with the obstacle, they were executed up to 17 m and failed from 19 m onward. Neither condition showed an intermittent pattern in which a failed point was followed by a successful one at a greater distance, so each condition had a single transition.

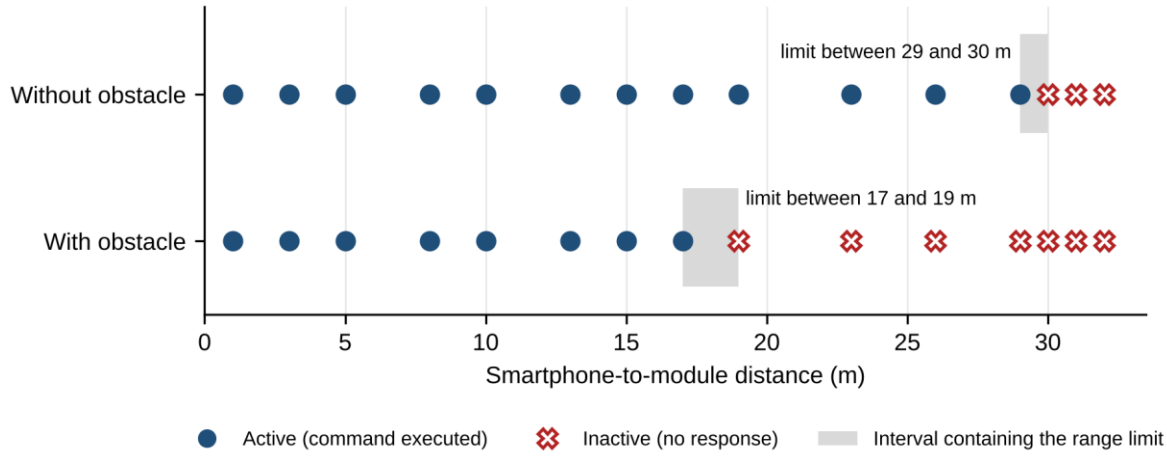

Figure 5. Command status at each tested distance with and without an obstacle between the smartphone and the motorcycle. Shaded bands mark the interval between the last active and the first inactive distance, within which each range limit lies.

Read as intervals, the obstructed limit lies between 17 and 19 m and the unobstructed limit between 29 and 30 m. The obstacle therefore shortened the usable range by 10–13 m, or about 34–43% of the unobstructed range. Stating the difference as a single value of 12 m would imply a precision that the 2 m step around the obstructed limit does not provide, which is why the interval form is retained throughout this paper.

Why the Obstacle Shortened the Range

The direction of the effect is expected from the physics of the link. A Bluetooth connection is maintained only while the power received by the HC-06 module and by the smartphone stays above the sensitivity of their receivers. Distance reduces this power, and any object in the path adds a further loss, so the distance at which the margin runs out moves closer to the transmitter. Measurements in human tissue analogues show that tissue-like media attenuate 2.4 GHz Bluetooth signals strongly [16], and handset measurements show that received signal strength changes with the user's body, the handset orientation, and nearby reflecting surfaces [15]. In the present test, the obstacle was characterized only by its presence between the smartphone and the motorcycle, so the 34–43% reduction applies to that configuration. A metal panel, a

masonry wall, or the rider's own body could shorten the range by a different amount, and the obstructed limit of 17–19 m is better treated as a configuration-specific value than as a conservative bound for every parking situation.

Comparison with Earlier Bluetooth Starter Controllers

Table 4 places the present limits beside the two Bluetooth starter controllers for which comparable distance data were found [6], [8].

Table 4. Range reported for Bluetooth starter controllers and the test conditions stated

Study	Controller and link	Functions	Reported range	Condition stated
Rosyid et al. [6]	Arduino Uno, HC-06	Starter by voice command	Active up to 10 m; failed at 12 m	Not stated
Maulana et al. [8]	Arduino, HC-05	Key on/off, starter, horn, alarm, security mode	Open area: active up to 13 m, failed at 14 m; enclosed space: active up to 6 m, failed at 7 m	Open vs. enclosed space
This study	Arduino Uno R3, HC-06	Ignition ON/OFF, starter with brake-switch signal, horn	Without obstacle: active up to 29 m, failed at 30 m; with obstacle: active up to 17 m, failed at 19 m	With vs. without obstacle

Note: Ranges are given as the last active and the first failed distance reported in each study.

Three observations follow from Table 4. First, both studies that separated propagation conditions found a shorter range when the path was obstructed or enclosed: roughly half for the open-versus-enclosed comparison in [8] and about 34–43% here. Second, the absolute limits differ widely, from 6 m to 29 m, although all three controllers used similar Bluetooth serial modules. Third, the present study did not record the smartphone model, its orientation, or the mounting height of the module, and Table 4 cannot control for these factors across studies. Because they alone can change received signal strength substantially [15], the longer range observed here should not be read as an advantage of the present design. It shows instead that a range figure becomes meaningful only together with its test condition and distance step, which is the reporting practice this study adopts.

Design Implications: Starting Sequence, Standby Power, and Security

Distributing the four functions over separate relays proved practical during testing, because the ignition path, the brake-switch signal, the starter relay, and the horn could be checked independently. The arrangement resembles the combination of engine start and alarm in [7] and the multi-function module in [8], and it leaves room for added interlocks or sensors. It also carries a safety consequence. Where the brake switch forms part of the starting condition, relay 2 reproduces that condition electrically, so the START command removes the rider's brake input from the starting sequence. A version intended for everyday use should therefore add safeguards such as a neutral or side-stand interlock, a maximum cranking time, and automatic release of all relays when the Bluetooth link is lost.

Parked power demand is a second design issue. The control unit must stay energized while the motorcycle is parked in order to receive commands. Its standby current was not measured here, but a comparable Bluetooth starter module drew 0.03–0.07 A at 12 V in standby, and its authors estimated that a 3 Ah battery would last only about 27–42 h depending on the operating mode [8]. A similar drain would make the present design unsuitable for vehicles parked for several days unless a low-power standby state or a separate supply is added.

The system should also not be described as a security device. The firmware executes any valid command character received through the HC-06 module and does not verify the sender

beyond Bluetooth pairing. At the level of the Bluetooth standard, device impersonation during connection establishment [17] and downgrading of the encryption key length [18] have been demonstrated, and keyless vehicle access systems have been shown to accept signals relayed between the vehicle and a legitimate key [19] and to use weak proprietary authentication [20]. The present prototype was not evaluated against any of these threats. If security is the intended use, the minimum additions are a non-default pairing PIN, whitelisting of the owner's device, authenticated commands with a challenge–response exchange, and automatic locking when the connection drops; monitoring beyond Bluetooth range additionally requires a GPS and cellular or Wi-Fi layer [3], [13], [14].

Educational Relevance and Limitations

For automotive vocational education, the prototype makes the relationship between a low-current control signal and the higher-current actuators of a motorcycle directly observable, and it links competencies in vehicle electrical systems, microcontroller programming, and wireless communication. Trainers built around a single vehicle subsystem, such as a throttle position sensor trainer [21] and a microcontroller-based injector test kit [22], serve similar instructional purposes. Learning outcomes were not measured in this study, so this use remains an implication of the design rather than a tested result.

Several limitations bound the findings. Each distance has a single recorded status per condition, so the range limits carry no estimate of repeatability, and the command success rate near each limit is unknown. The obstacle was represented only by its presence, and the smartphone model, the mounting position of the module, and the engine state were not treated as test variables. Command latency, standby current, and supply voltage during cranking were not measured. Future tests should repeat a fixed number of commands at each distance, use 1 m steps around each transition, record received signal strength and latency, and compare obstacle materials and module placements.

CONCLUSION

An Arduino Uno control unit that switches the ignition circuit, a brake-switch signal, the starter relay, and the horn of a conventional motorcycle through four relays was implemented and operated from an Android smartphone through an HC-06 Bluetooth module. All four commands produced their designed relay responses in the functional test. Commands remained executable up to a limit between 17 and 19 m with an obstacle in the path and between 29 and 30 m without it, so the tested obstacle shortened the usable range by about 34–43%.

These limits apply to the tested configuration and to a single recorded status per distance. The prototype is therefore suitable as a short-range convenience control and as a teaching object for vehicle electrical systems, whereas use as an anti-theft device would require authenticated commands, safety interlocks for the starting sequence, and repeated reliability testing.

REFERENCES

[1] R. Fajri, Iqbal, and Farizal, “Implementasi radio frequency identification sebagai sistem keamanan sepada motor berbasis Arduino,” Sisfo: Jurnal Ilmiah Sistem Informasi, vol. 9, no. 1, pp. 51–62, 2025, doi: 10.29103/sisfo.v9i1.22134.

[2] H. Wadi, E. Suryadi, A. Akbar, and L. D. Samsumar, “Perancangan dan implemetasi sistem kontrol sepeda motor berbasis sidik jari dan mobile untuk keamanan kendaraan,” Jurnal Rekayasa Sistem Informasi dan Teknologi, vol. 2, no. 2, pp. 720–728, 2024, doi: 10.70248/jrsit.v2i2.1415.

[3] Y. Seftiani, "Prototype alat pengaman sepeda motor berbasis Arduino Uno terintegrasi GPS, notifikasi dan kontrol melalui SMS," Jurnal Elektro dan Mesin Terapan (ELEMENTER), vol. 10, no. 1, pp. 1–10, 2024, doi: 10.35143/elementer.v10i1.6255.
[4] W. Putra and W. Purwanto, "Arduino-based automatic control system for turn signal and brake lights on motorcycle," MOTIVECTION: Journal of Mechanical, Electrical and Industrial Engineering, vol. 2, no. 1, pp. 43–55, 2020, doi: 10.46574/motivection.v2i1.31.
[5] S. Suradi, F. Rahman, S. Selvi, and A. Wahyudi, "Perancangan sistem starter sepeda motor menggunakan aplikasi Android berbasis Arduino Uno," ILTEK: Jurnal Teknologi, vol. 15, no. 1, pp. 17–20, 2020, doi: 10.47398/iltek.v15i01.5.
[6] A. Rosyid, A. S. Budi, and P. H. Susilo, "Kontrol sistem starter sepeda motor berbasis mikrokontroler dengan smartphone Android menggunakan voice recognition," JEECOM: Journal of Electrical Engineering and Computer, vol. 2, no. 2, pp. 7–12, 2020, doi: 10.33650/jeecom.v2i2.1400.
[7] P. Haruman, J. Saputro, and A. Asruddin, "Rancang bangun prototipe sistem start engine dan alarm sepeda motor menggunakan mikrokontroler Arduino berbasis Android," Sistem Komputer dan Teknologi Intelegensi Artifisial (SIKOMTIA), vol. 1, no. 2, pp. 149–159, 2023, doi: 10.59039/sikomtia.v1i2.14.
[8] R. Maulana, T. Permana, I. Mubarak, and M. M. Al Ghifari, "Analysis of electrical power requirements for Arduino based wireless starter control module in motorcycles," MOTOR: Journal of Automotive Engineering, vol. 1, no. 2, pp. 1–12, 2024, doi: 10.17509/motor.v1i2.73196.
[9] R. Rizkyana and A. Surya, "Sistem keamanan sepeda motor dengan mengganti saklar starter menggunakan fingerprint," JTTM: Jurnal Terapan Teknik Mesin, vol. 2, no. 1, pp. 43–51, 2021, doi: 10.37373/jttm.v2i1.90.
[10] B. Danar and M. Zakarijah, "Sistem keamanan ganda sepeda motor dengan fingerprint dan GPRS berbasis Arduino untuk peningkatan keamanan," Elinvo (Electronics, Informatics, and Vocational Education), vol. 5, no. 1, pp. 1–10, 2020, doi: 10.21831/elinvo.v5i1.34592.
[11] R. Khairunisa and R. Hidayat, "Vehicle starter system for safety based microcontroller using Internet of Things," TEKNOKOM, vol. 6, no. 1, pp. 36–42, 2023, doi: 10.31943/teknokom.v6i1.113.
[12] A. Permana, A. Surapati, and H. Santosa, "Penerapan teknologi RFID, GSM dan GPS pada perancangan sistem keamanan sepeda motor," Jurnal Teknologi, vol. 14, no. 1, pp. 19–26, 2022, doi: 10.24853/jurtek.14.1.19-26.
[13] A. T. Wibowo, I. Salamah, and A. Taqwa, "Rancang bangun sistem keamanan sepeda motor berbasis IoT (Internet of Things)," Jurnal Fasilkom, vol. 10, no. 2, pp. 103–112, 2020, doi: 10.37859/jf.v10i2.2083.
[14] Nasrudin, E. Permata, and D. Aribowo, "Perancangan alat pendeteksi pencurian dan pelacak sepeda motor berbasis WiFi menggunakan NodeMCU ESP8266," Jurnal Elektro dan Mesin Terapan (ELEMENTER), vol. 11, no. 2, pp. 152–164, 2025, doi: 10.35143/elementer.v11i2.6810.
[15] D. J. Leith and S. Farrell, "Coronavirus contact tracing: Evaluating the potential of using Bluetooth received signal strength for proximity detection," ACM SIGCOMM Computer Communication Review, vol. 50, no. 4, pp. 66–74, 2020, doi: 10.1145/3431832.3431840.
[16] M. J. Christoe, J. Yuan, A. Michael, and K. Kalantar-Zadeh, "Bluetooth signal attenuation analysis in human body tissue analogues," IEEE Access, vol. 9, pp. 85144–85150, 2021, doi: 10.1109/ACCESS.2021.3087780.
[17] D. Antonioli, N. O. Tippenhauer, and K. Rasmussen, "BIAS: Bluetooth impersonation attacks," in Proc. 2020 IEEE Symposium on Security and Privacy (SP), San Francisco, CA, USA, 2020, pp. 549–562, doi: 10.1109/SP40000.2020.00093.

[18] D. Antonioli, N. O. Tippenhauer, and K. Rasmussen, "Key negotiation downgrade attacks on Bluetooth and Bluetooth Low Energy," ACM Transactions on Privacy and Security, vol. 23, no. 3, pp. 1–28, 2020, doi: 10.1145/3394497.
[19] J. Li, Y. Dong, S. Fang, H. Zhang, and D. Xu, "User context detection for relay attack resistance in passive keyless entry and start system," Sensors, vol. 20, no. 16, Art. no. 4446, 2020, doi: 10.3390/s20164446.
[20] L. Wouters, E. Marin, T. Ashur, B. Gierlichs, and B. Preneel, "Fast, furious and insecure: Passive keyless entry and start systems in modern supercars," IACR Transactions on Cryptographic Hardware and Embedded Systems, vol. 2019, no. 3, pp. 66–85, 2019, doi: 10.46586/tches.v2019.i3.66-85.
[21] R. T. Pahlevi, D. S. Putra, W. Purwanto, and M. Y. Setiawan, "Development of throttle position sensor practical trainer," MOTIVECTION: Journal of Mechanical, Electrical and Industrial Engineering, vol. 6, no. 1, pp. 125–138, 2024, doi: 10.46574/motivection.v6i1.313.
[22] R. Hidayat, D. S. Putra, and I. Y. Basri, "Design of microcontroller based injector test kit," MOTIVECTION: Journal of Mechanical, Electrical and Industrial Engineering, vol. 1, no. 1, pp. 35–44, 2019, doi: 10.46574/motivection.v1i1.12.

This page is intentionally left blank.